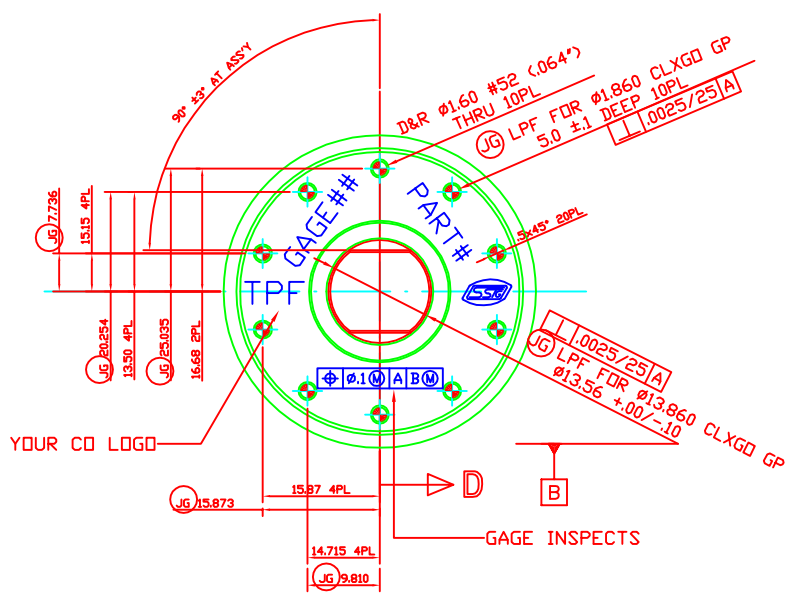

TPF GAGE BY SST

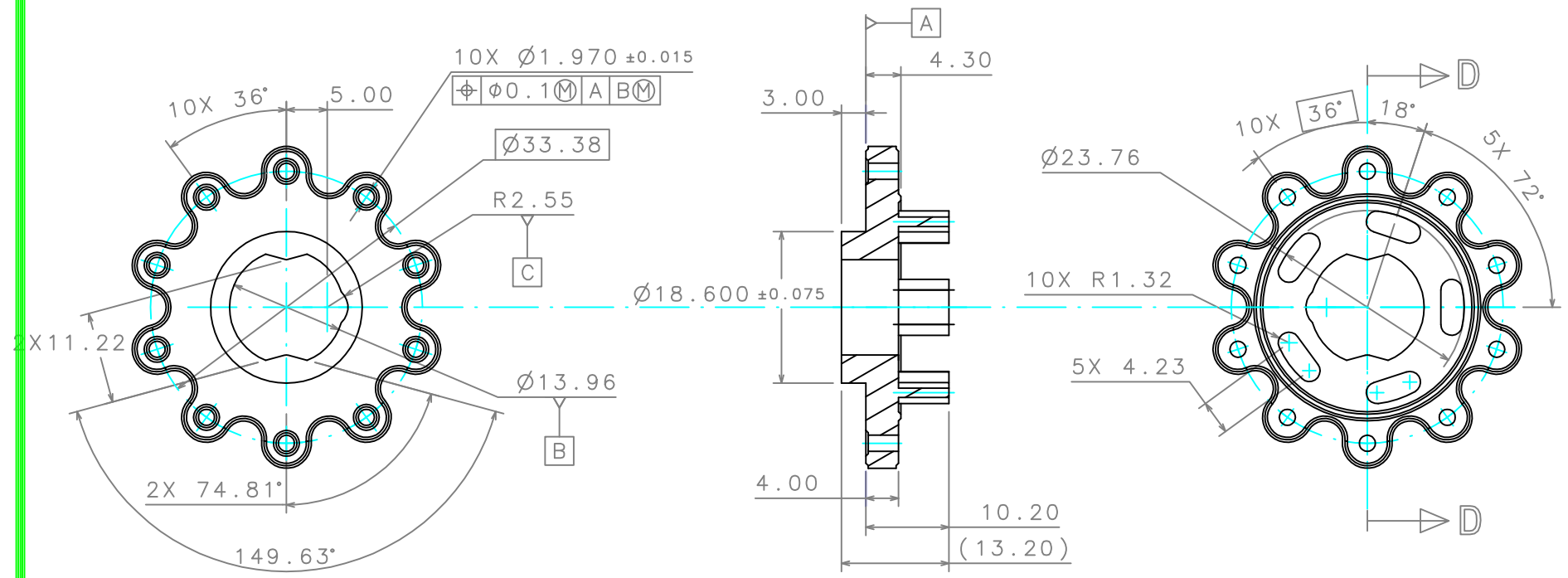

CUSTOMER'S PART DRAWINGS

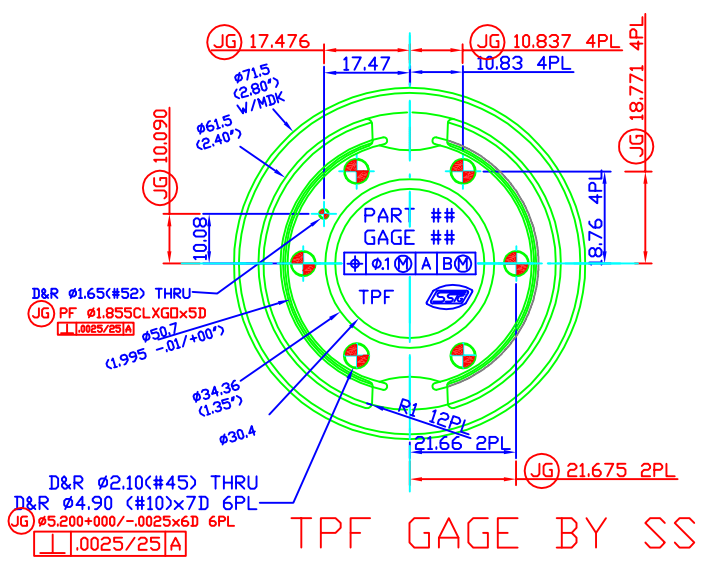

TPF GAGE BY SST

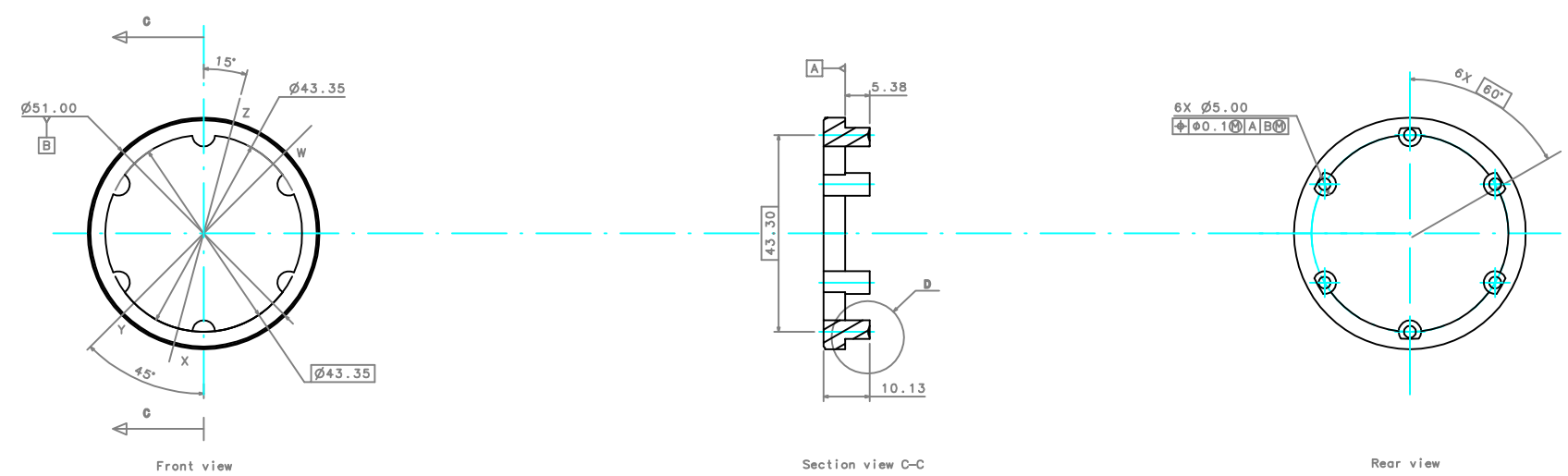

CUSTOMER'S PART DRAWINGS

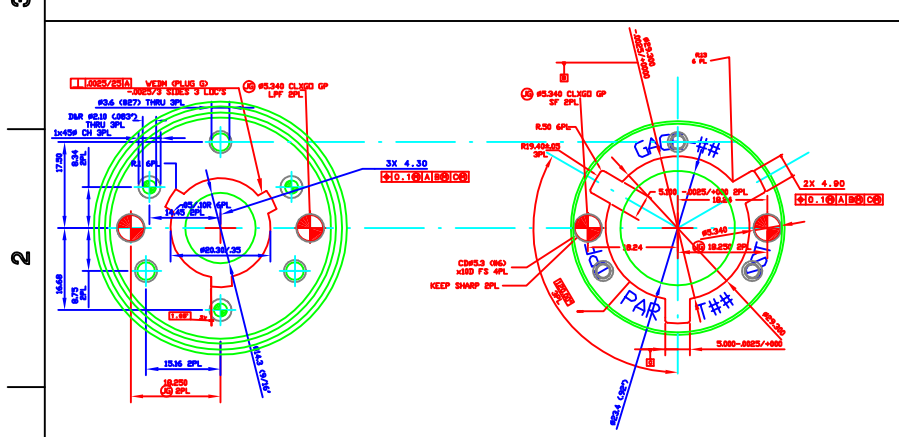

TPF GAGE BY SST

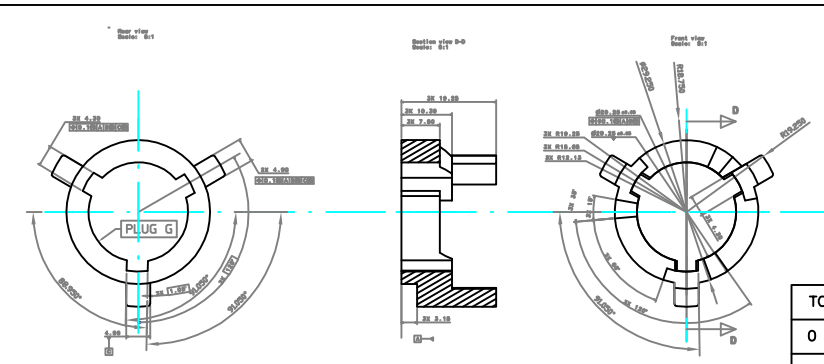

CUSTOMER'S PART DRAWINGS

THIS DOCUMENT IS THE PROPERTY OF SALISBURY SPECIAL TOOL THE CONTENTS OF THIS DOCUMENT ARE CONFIDENTIAL AND CONSTITUTE TRADE SECRETS PRORPRIETARY TO SALISBURY SPECIAL TOOL NEITHER THIS DOCUMENT NOR ITS' CONTENTS SHALL BE DISCLOSED TO ANY UNAUTHORIZED PERSON, COPIED OR PUBLISHED WITHOUT PRIOR WRITTEN CONSENT OF SALISBURY SPECIAL TOOL

COPYRIGHT © 2007 SALISBURY SP'L TOOL CO.

TOL UNLESS SPECIFIED	DOC NO: BD-SST TYPICAL TPF GAGES
0 & 1 PLC DEC: ± 0.3	
2 PLC DEC: ± 0.10	
ANGLES: ± 1°	
ALL DIMENSIONS mm	
SIZE A2	
SHEET 1 of 1	

SALISBURY SPECIAL TOOL & GAGE Co.
ENGINEERING & MANUFACTURING
TPF (True Position Functional) GAGES
PO BOX 2598 SALISBURY, MARYLAND 21802-2598
TEL: 410-784-2024
FAX: 410-784-2419
Email: <sstpv@verizon.net>

P VARGA 12/12/08